FRONT

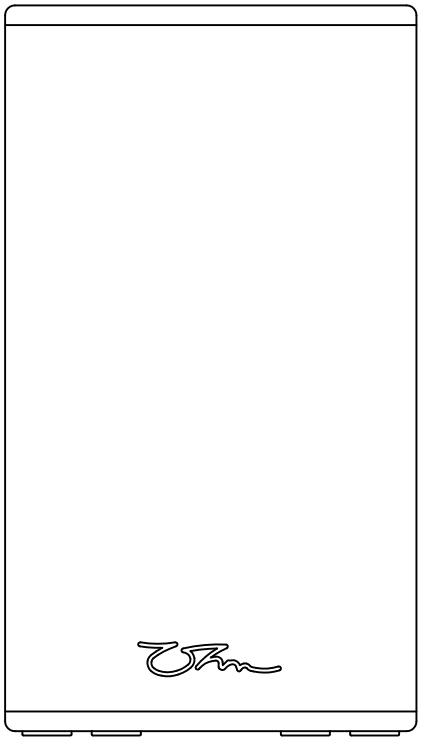

SIDE

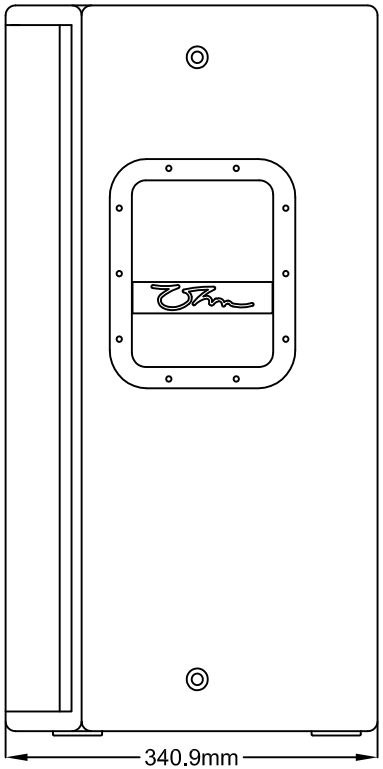

BACK

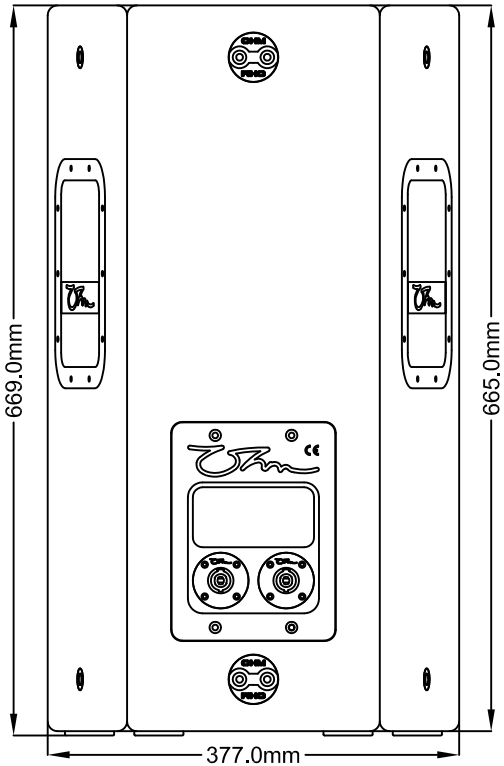

TOP

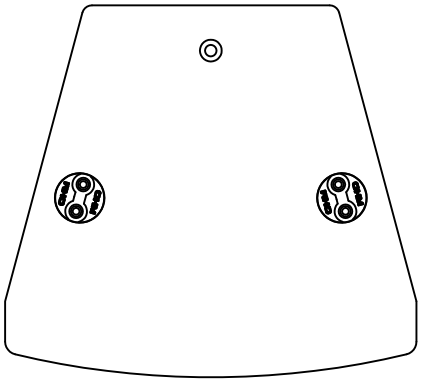

BOTTOM

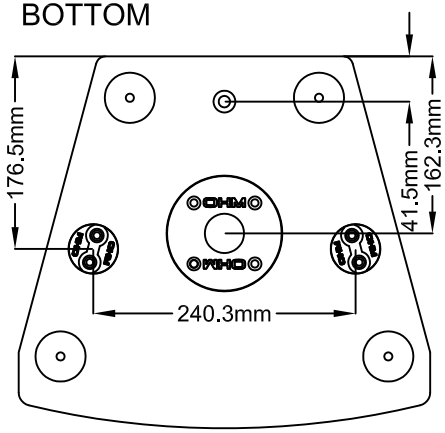

All dimensions in MM unless otherwise stated					COMPANY: IDEX LTD
	ISSUE	SIGNATURE	DATE		TITLE: BR-12 Cabinet
DRAWN:	ATTHOMAS		10-04-07		
CHKD:					
APPRVD:					
MFG:					
Q.A:					
Version					MATERIAL: BIRCH PLY
Notes/Changes					WEIGHT
					SCALE 1:10 SHEET 1 OF